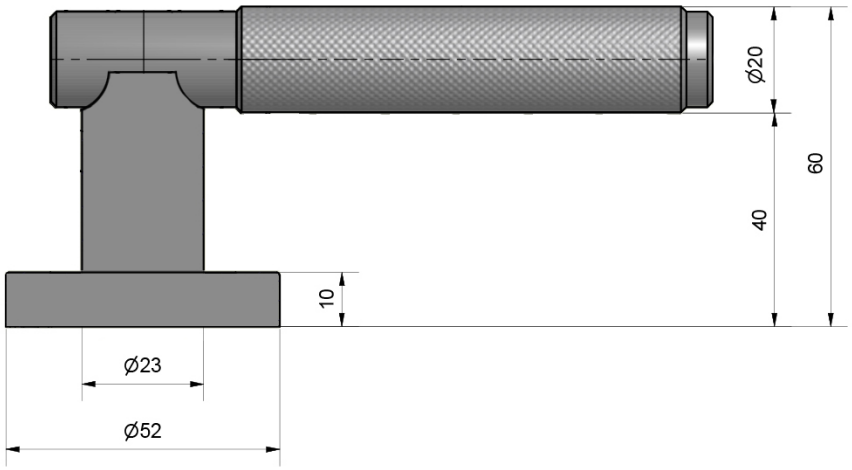

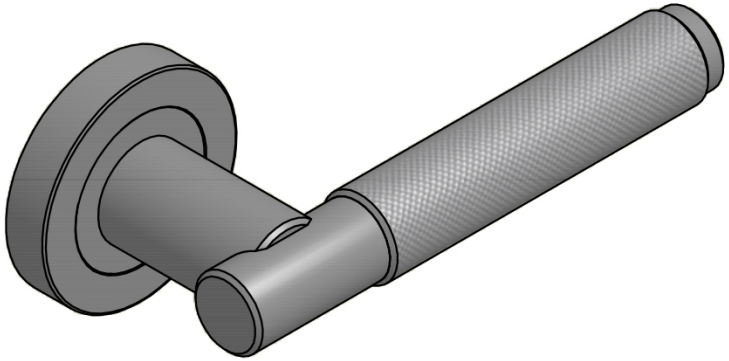

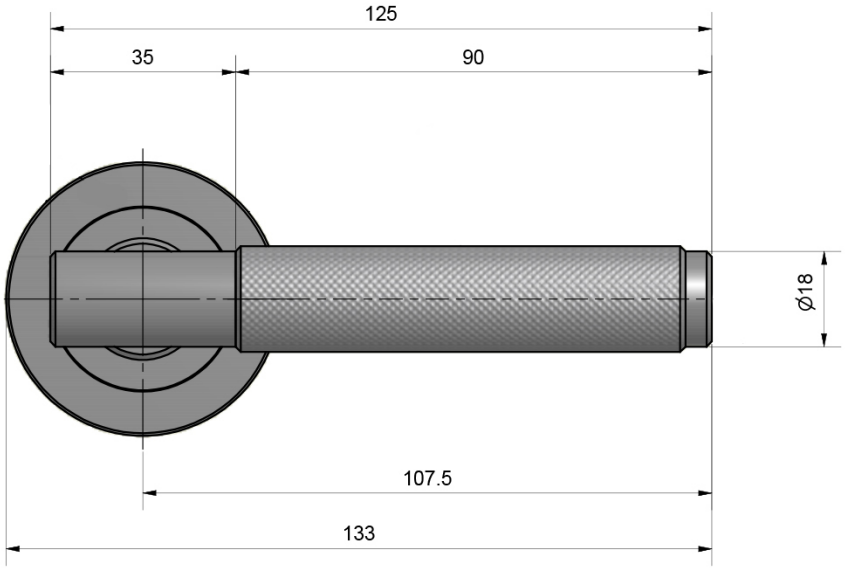

		Description	Code
		Tura Door Handle	TDH
			Pittella®
Date	10/01/2018		

COPYRIGHT (C) PITTELLA PTY LTD ALL RIGHTS RESERVED